TEMPERATURE CONTROLLER
1/16 DIN - 48 x 48
model ELKM4

Quick Guide
ELM4-GB-00-05-B

The plant where the component has to be installed must be compliant with the safety requirements in force.
Safety electromechanical devices must be installed.
We warrant that the product will be free from defects in material and workmanship for 12 months from the date of delivery. Products and components that are subject to wear due to conditions of use, service life and misuse are not covered by this warranty.

ELCO S.r.l.
Via Lago di Molveno, 20
36015 SCHIO (VI) ITALY
TEL. +39 0445 661722
FAX+39 0445 661792
Website: http://www.elco-italy.com
e-mail: info@elco-italy.com
support@elco-italy.com

DISPLAY AND KEYS

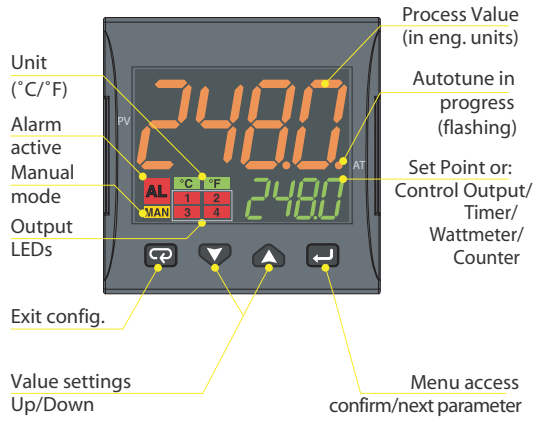

MOUNTING

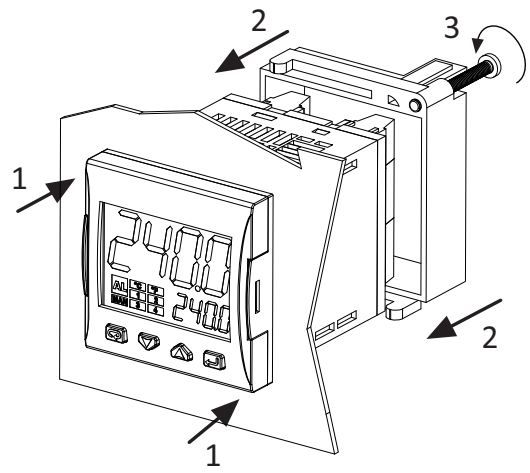

KEYS FUNCTIONS

	Operator Mode	Editing Mode
↵	Menu access	Confirm/Next parameter
▼	Set Point Change Access	Value change (Down)
▲	Display values of Output and Power/Timer/ Wattmeter/Time count	Value change (Up)
⟲	Programmable	Exit Configuration session

DIMENSIONS

Dimensions (W x H x D): 48 x 48 x 63 mm (1.89 x 1.89 x 2.48 in.)
Foratura pannello (W x H): $45^{+0.6}$ x $45^{+0.6}$ mm ($1.78^{+0.023}$ x $1.78^{+0.023}$ in.)

MODEL CODE

The Code identifies the controller hardware.

Model: ELKM4 | A | B | C | D | E | F | G | H

Optional functions	A
None	-
Timer	T

Power Supply	B
24 V AC/DX	24
100...240 V AC	240

Analog input signal + digital inpit DI1 (standard)	C
J, K, R, S, T, PT100, PT1000 (2 fili / 2 wires), mA, mV, V	C
J,K, R, S, T, NTC, PTC, mA, mV, V	E

Main output OUT 1	D
Relè SPDT 4A (resistive load)	R
V DC for SSR (13 V DC max @ 1 mA, 10,5 V DC min @15 mA +/- 10%)	S

Second utput OUT 2	E
Relè SPST-NO 2 A (resistive load)	2R
V DC for SSR (13 V DC max @ 1 mA, 10,5 V DC min @15 mA +/- 10%)	2S
No output	-

Third output OUT 3	F
Relè SPST-NO 2 A (resistive load)	3R
V DC for SSR (13 V DC max @ 1 mA, 10,5 V DC min @15 mA +/- 10%)	3S
No output	-

Input - Fourth output OUT 4	G
V DC for SSR / Transmitter power supply / Digital input DI2	-

Serial communication	H
RS485 MODBUS + TTL MODBUS	S
TTL MODBUS	-

ELECTRICAL CONNECTIONS

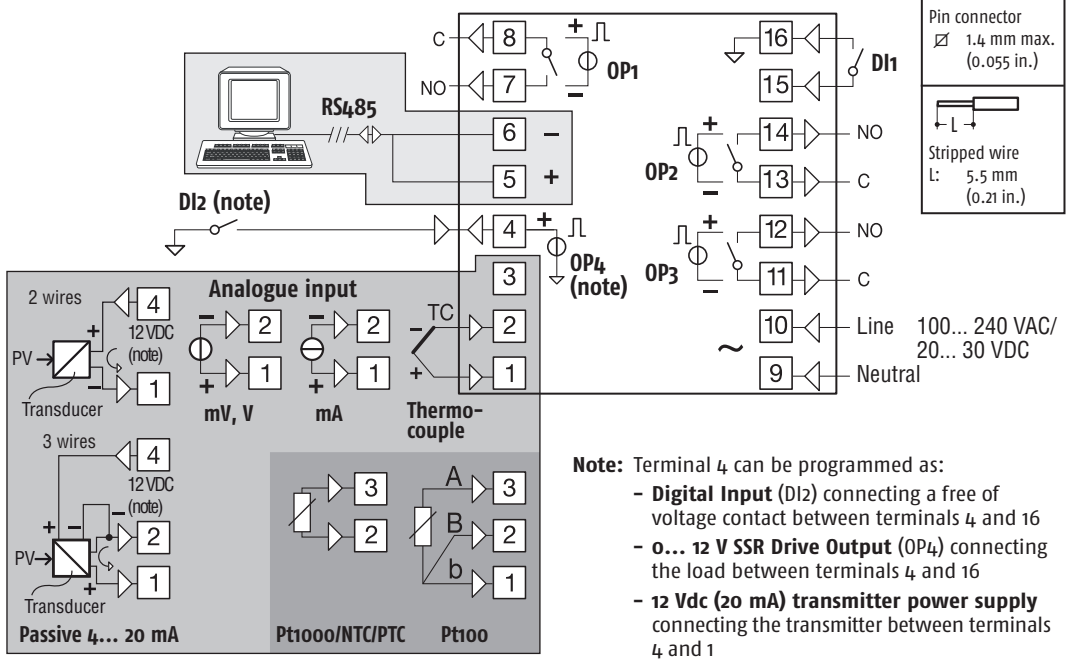

TERMINALS

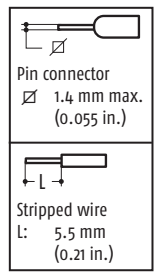

Note: Terminal 4 can be programmed as:
- **Digital Input** (DI2) connecting a free of voltage contact between terminals 4 and 16
- **0... 12 V SSR Drive Output** (OP4) connecting the load between terminals 4 and 16
- **12 Vdc (20 mA) transmitter power supply** connecting the transmitter between terminals 4 and 1

CONFIGURATION CODE (step 1)

The Controller Configuration (Input type, Control mode Alarms and Auxiliary functions) can be made entering two 4-digit codes.
Before to start Configuration procedure, prepare the 2 configuration codes according to the following tables.

Cod1 L M N O — User Cod1 L M N O

Input Type and Range		L	M
TC J	-50... +1000°C	0	0
TC K	-50... +1370°C	0	1
TC S	-50... 1760°C	0	2
TC R	-50... +1760°C	0	3
TC T	-70... +400°C	0	4
Infrared J	-50... +785°C	0	5
Infrared K	-50... +785°C	0	6
PT 100/PTC KTY81-121	-200... +850°C/-55... +150°C	0	7
PT 1000/NTC 103-AT2	-200... +850°C/-50... +110°C	0	8
Linear 0... 60 mV		0	9
Linear 12... 60 mV		1	0
Linear 0... 20 mA (this selection forces Out 4 = TX)		1	1
Linear 4... 20 mA (this selection forces Out 4 = TX)		1	2
Linear 0... 5 V		1	3
Linear 1... 5 V		1	4
Linear 0... 10 V		1	5
Linear 2... 10 V		1	6
TC J	-58... +1832°F	1	7
TC K	-58... +2498°F	1	8
TC S	-58... 3200°F	1	9
TC R	-58... +3200°F	2	0
TC T	-94... +752°F	2	1
Infrared J	-58... +1445°F	2	2
Infrared K	-58... +1445°F	2	3
PT 100/PTC KTY81-121	-328... +1562°F/-67... +302°F	2	4
PT 1000/NTC 103-AT2	-328... +1562°F/-58... +230°F	2	5

Control mode	OP1	OP2	OP3	OP4	N	O
ON/OFF heating = H	H	AL1	AL2	AL3	0	0
	NU	AL1	AL2	H	0	1
ON/OFF cooling = C	C	AL1	AL2	AL3	0	2
	NU	AL1	AL2	C	0	3
ON/OFF with neutral zone (H/C)	H	C	AL2	AL3	0	4
	H	AL1	AL2	C	0	5
	C	H	AL2	AL3	0	6
	NU	H	AL2	C	0	7
	C	AL1	AL2	H	0	8
	NU	C	AL2	H	0	9
PID heating = H	H	AL1	AL2	AL3	1	0
	NU	AL1	AL2	H	1	1
PID cooling = C	C	AL1	AL2	AL3	1	2
	NU	AL1	AL2	C	1	3
PID double action (H/C)	H	C	AL2	AL3	1	4
	H	AL1	AL2	C	1	5
	C	H	AL2	AL3	1	6
	NU	H	AL2	C	1	7
	C	AL1	AL2	H	1	8
	NU	C	AL2	H	1	9

Cod2 P Q R S — User Cod2 P Q R S

Alarm 3				R
Alarm 2			Q	
Alarm 1		P		
Not used		0	0	0
Sensor break		1	1	1
Absolute	High	2	2	2
	Low	3	3	3
Absolute High/Low	External High/Low	4	4	4
	Internal High/Low	5	5	5
Deviation	Deviation high	6	6	6
	Deviation low	7	7	7
Band	External band	8	8	8
	Internal band	9	9	9

Auxiliary functions activation	S
None	0
Wattmeter (instantaneous power expressed in W)	1
Wattmeter (energy expressed in Wh)	2
Absolute worked time (expressed in days)	3
Absolute worked time (expressed in hours)	4

HOW TO SET THE CONFIGURATION CODE (step: 2)

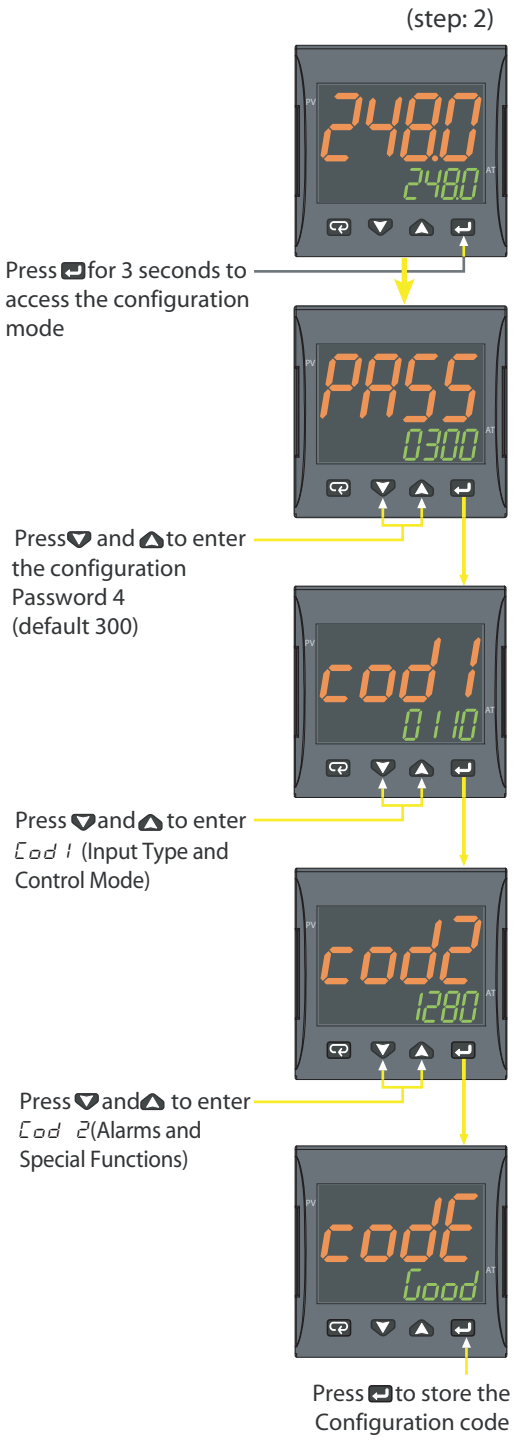

Note: to leave the configuration session without saving the settings, press the button ↵

ALARM TYPES

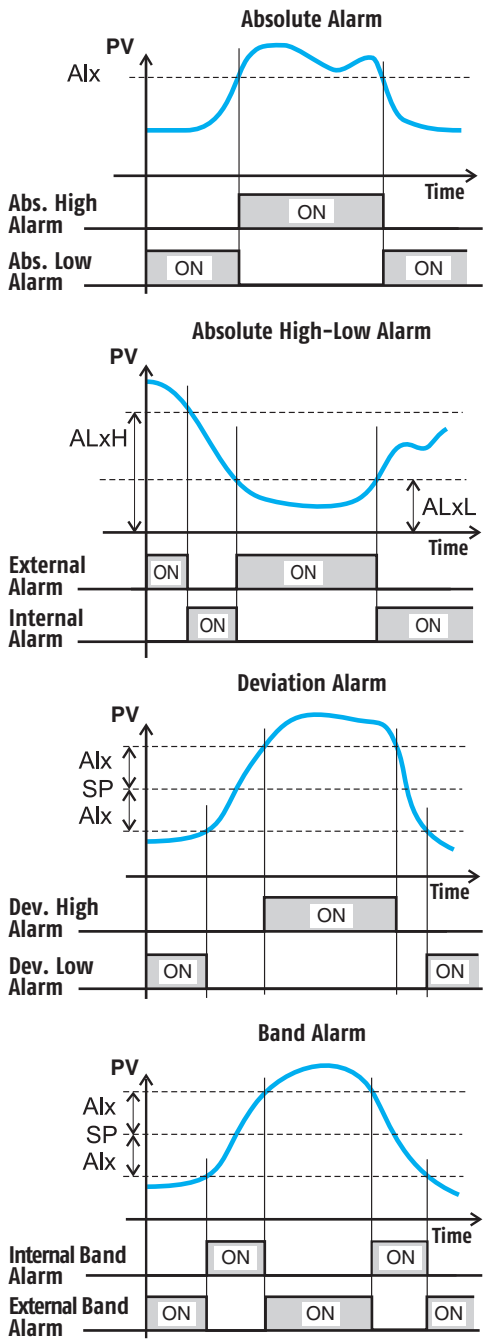

CONTROLLER OPERATION

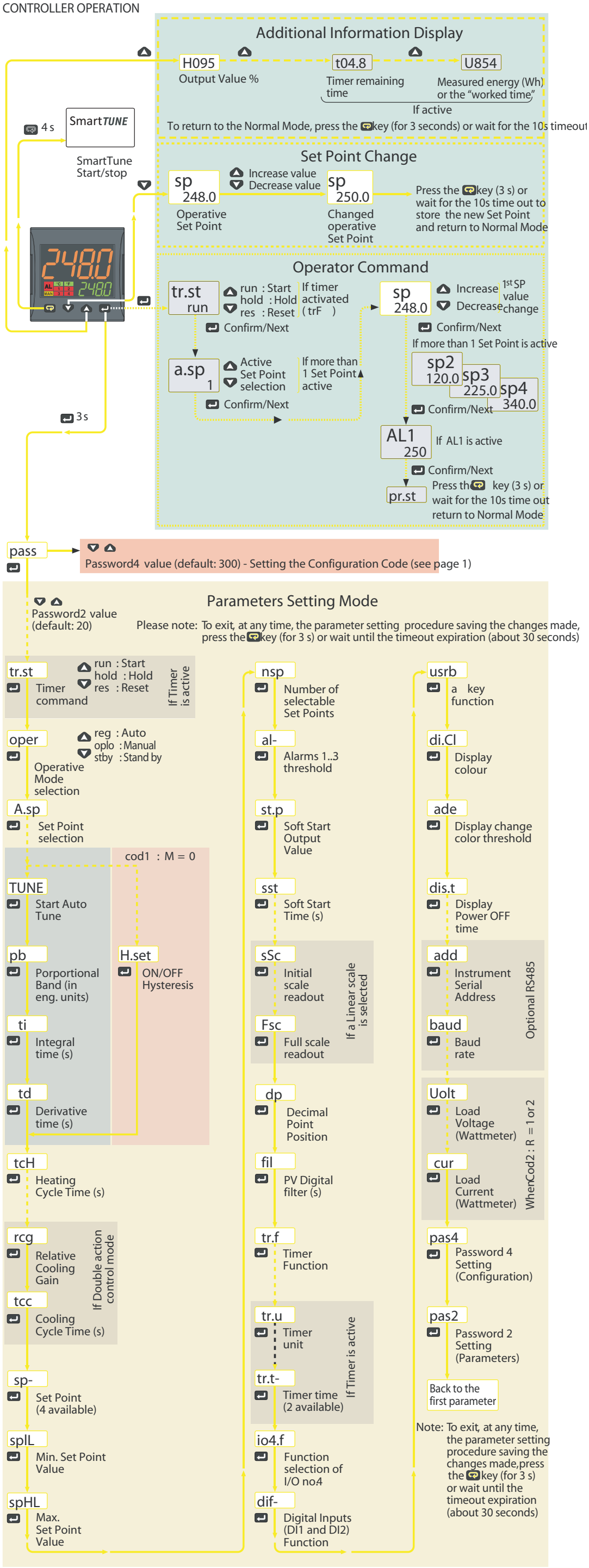

Parameters List (PASS: 20)

	Param.	Description	Range	Default value	User value
Commands	trSt	Timer status		Option	
	oPEr	Operative Mode Selection	Auto = reg, Manual = oplo, Standby = stdy		
	ASP	Set Point Selection	0... 3	0 = SP	
	tunE	Start Auto Tune	0... 1	0 = OFF	
Control	Pb	Proportional Band	1... 9999	20	
	ti	Integral Time	0... 10000 s	200	
	td	Derivative Time	0... 1000 s	50	
	HSEt	Hysteresis ON/OFF Corntrol	0... 9999	1	
	tcH	Heating output cycle time	0.1... 130 s	20.0	
	rcG	Relative Cooling Gain	0.01... 99.99	1.00	
	tcC	Cooling output cycle time	0.1... 130 s	20.0	
Set Point	SP	Set Point 1	-1999... +9999 (E.U.)		
	SP2	Set Point 2			
	SP3	Set Point 3			
	SP4	Set Point 4			
	SPLL	Set Point min. Value	-1999... SPHL (E.U.)		
	SPHL	Set Point max. Value	SPLL... 9999 (E.U.)		
	nSP	No. of Set Points	1... 4	1	
Alarms	AL1	Alarm 1 threshold	AL1L... AL1H		
	AL1L	Alarm 1 low threshold/AL1 low limit	-1999... +9999 (E.U.)	-1999	
	AL1H	Alarm 1 high threshold/AL1 high limit		9999	
	AL2	Alarm 2 threshold	AL2L... AL2H		
	AL2L	Alarm 2 low threshold/AL2 low limit	-1999... +9999 (E.U.)	-1999	
	AL2H	Alarm 2 high threshold/AL2 high limit		9999	
	AL3	Alarm 3 threshold	AL3L... AL3H		
	AL3L	Alarm 3 low threshold/AL3 low limit	-1999... +9999 (E.U.)	-1999	
	AL3H	Alarm 3 high threshold/AL3 high limit		9999	
Soft Start	StP	Soft Start Output value	-100... 100%	0	
	SSt	Soft Start Time	0.00... 8.00 (hh.mm)	0	
Input	SSc	Low Scale readout	-1999... sch	-1999	
	FSc	High Scale readout	scl... +9999	9999	
	dP	Number of decimals	0... 3	0	
	FiL	Measured value Digital filter	OFF; 0.1... 20.0 s	0 = OFF	
Timer	trF	Timer Type	nonE i.d.A i.uP.d i.d.d i.P.L i.L.P	none	
	tru	Timer Units	0 = hh.mm 1 = mm.ss 2 = sss.d	1 = mm.ss	
	trt1	Time 1	00.01... 995.9	1.00	
	trt2	Time 2	00.00... 995.9	1.00	
I/O	io4F	I/O 4 Function	ON = Transmitter Power Supply OUT4 = SSR out Di2C = Dig. In. from contact Di2U = 24 VDC Digital Input	ON	
Digital Inputs	diF1	Digital Input 1 Function	0... 21	0	
	diF2	Digital Input 2 Function	0... 21	0	
	uSrb	Key "" Function	nonE, tunE, oPLo, stand-by	tunE	
Display	diCL	Display colour	0 = Change 1 = Red 2 = Green 3 = Orange	2	
	AdE	Display change color threshold (when diCL = 0)	0 (OFF)... 9999 (E.U.)		
	diSt	Display Power OFF time (mm.ss)	oFF (display ON) 0.1... 99.59	oFF	
Serial interface	Add	Instrument Address	1... 254	1	
	bAud	Baud rate	1200, 2400, 9600 baud, 19.2, 38.4 kbaud	9600	
Wattmeter	UoLt	Load Voltage	1... 999 (V)	230	
	cur	Load Current	1... 9999 (A)		
Password	PAS4	Configuration access Password	0... 999	300	
	PAS2	Parameters access Password	0... 999	20	

Functions selection

trF Timer Type

Code displayed	Description
nonE	Timer not used
idA	Delayed ON at start command
iuP.d	Activation ON at Power ON
idd	At start command
iPL	Asymmetrical oscillator with start in OFF
iLP	Asymmetrical oscillator with start in ON

Timer functioning diagram

idA **Delayed ON at Start command**

iuP.d **Delayed ON at Power ON**

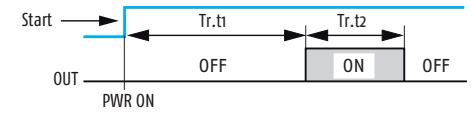

idd **At Start command**

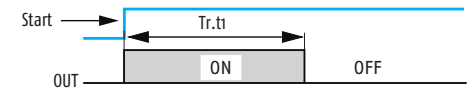

iPL **Asymmetrical oscillator with start in OFF**

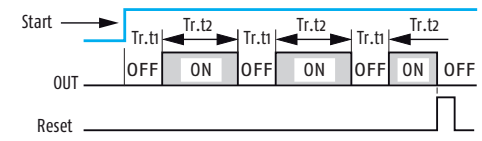

iLP **Asymmetrical oscillator with start in ON**

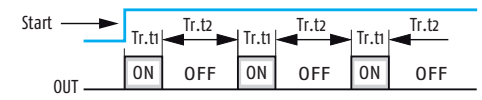

diF_ Digital Inputs DI1 and DI2 Functions

Code displayed	Description
0	Disabled (OFF)
1	Alarm Reset
2	Alarm Acknowledge (ACK)
3	Hold of the measured value
4	Stand by mode
5	Manual Mode
6	Heat with "SP" and CooL with "SP2"
7	Timer Run/Hold/Reset [on transition]
8	Timer Run [on transition]
9	Timer Reset [on transition]
10	Timer Run/Hold
11	Timer Run/Reset
12	Timer Run/Reset with lock at the end of the time count
13	No function (OFF)
14	No function (OFF)
15	No function (OFF)
16	No function (OFF)
17	No function (OFF)
18	Sequential Set Point selection [on transition]
19	SP/SP2 selection
20	Binary coding for Set Point selection on DI1 and DI2 (00 = SP, 01 = SP2, 10 = SP3, 11 = SP4)
21	Digital inputs in parallel to the UP and Down keys (DI1 = UP key, DI2 = DOWN key)

uSrb Key "" Function

Code displayed	Description
nonE	Not used
tunE	Starts auto tuning functions
oPLo	Manual mode
AAc	Alarm Reset
AS1	Alarm Acknowledge
chSP	Circular Set Point Selection
StbY	Stand-by
StrtE	Starts/Stop/Reset timer

Complete Configuration and Parameter setting can be easily uploaded from the controller and downloaded to other controllers using the:
Configuration Key and Communication Adapter model: KEYA-01